EXPLODED VIEW

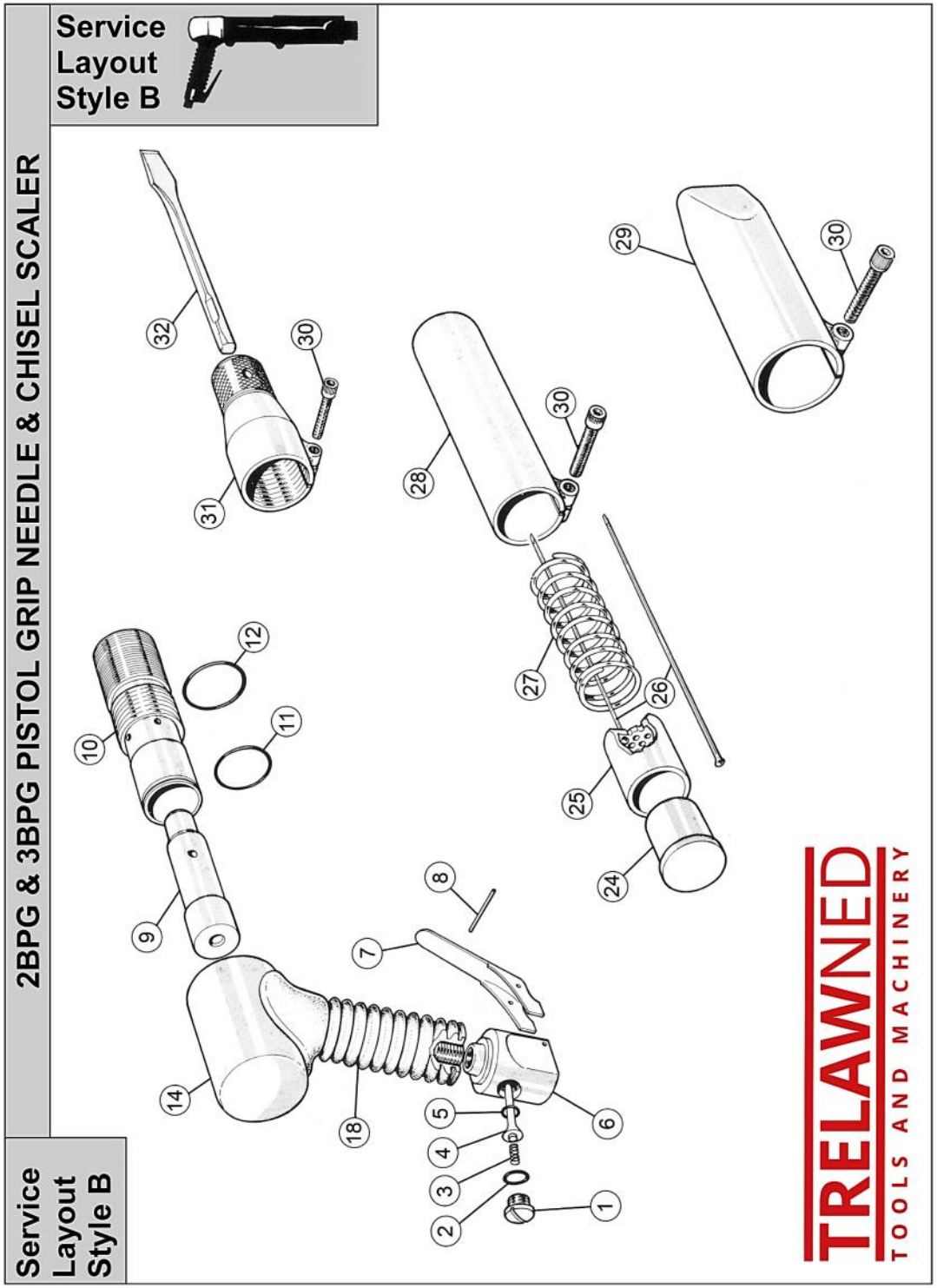

2BPG & 3BPG PARTS LIST

Item	Part No	Description	Item	Part No	Description
Common Components			**2BPG Unique Components**		
1	615.3021	Valve Cap	9	612.2001	Piston
2	809.0139	O' Ring – Valve Cap	10	613.2101	Cylinder
3	712.3022	Valve Spring	11	809.0249	O'Ring (Small Dia)
4	618.3022	Valve Stem	12	809.0269	O'Ring (Large Dia)
5	809.0089	O' Ring – Valve Seat	13	425.2100	Cover
6	616.3021	Valve Body 1/4" BSP Thread	24	610.2001	Anvil
	423.3021	Valve Body Assembly (inc items 1-8) 1/4" BSP Thread	25	601.2002	Needle Holder 2mm
	423.3521	Valve Body Assembly (inc items 1-8) 1/4" NPT Thread		601.2003	Needle Holder 3mm
7	716.3000	Throttle Lever	26	412.1151	6 x Needle Sets 2mm (Flat Tip)
8	813.0108	Roll Pin		413.2119	6 x Needle Sets 3mm (Chisel Tip)
18	717.3101	Rubber Grip		413.1119	6 x Needle Sets 3mm (Flat Tip)
26	442.1107	Pack of 2000 2mm Needles (Flat Tip)		413.3119	6 x Needle Sets 3mm (Pointed Tip)
	452.1110	Pack of 100 2mm Needles (Flat Tip)		403.1319	1 x Needle Set 3mm (Beryllium Copper - Flat Tip)
	443.2107	Pack of 1000 3mm Needles (Chisel Tip)	27	712.2001	Spring - Compression
	443.1107	Pack of 1000 3mm Needles (Flat Tip)	28	416.2032	Intermediate Tube (Includes item 30)
	443.3107	Pack of 1000 3mm Needles (Pointed Tip)	29	417.2032	Straight Front Tube (Includes item 30)
	443.1307	Pack of 500 3mm Needles (Beryllium Copper)		418.2032	Round Front Tube (Includes item 30)
	453.2110	Pack of 100 3mm Needles (Chisel Tip)	30	806.0830	Cap Head Screw
	453.1110	Pack of 100 3mm Needles (Flat Tip)	31	419.2241	Chisel Holder 1/2" Square
	453.3110	Pack of 100 3mm Needles (Pointed Tip)		446.1025	Service Kit (Inc. 9,17,24,25,27 & 1 Set Needles)
	453.1310	Pack of 100 3mm Needles (Beryllium Copper)			
	444.1107	Pack of 500 4mm Needles (Flat Tip)	**3BPG Unique Components**		
	444.3107	Pack of 500 4mm Needles (Pointed Tip)	9	612.3001	Piston
	454.1105	Pack of 50 4mm Needles (Flat Tip)	10	613.3101	Cylinder
	454.3105	Pack of 50 4mm Needles (Pointed Tip)	11	809.0289	O'Ring (Small Dia)
32	704.1101	Chisel 1/2" Square 7" Long x 3/4" Blade	12	809.0299	O'Ring (Large Dia)
	704.1103	Chisel 1/2" Square 7" Long x 2 3/4" Blade	13	425.3100	Cover
	704.1106	Chisel 1/2" Square Brick Rake	24	610.3001	Anvil
	704.1110	Chisel 1/2" Square 7" Long Spark Resistant 2 " Blade	25	601.3002	Needle Holder 2mm
	704.2105	Chisel 1/2" Square 7" Long Cranked x 1 3/8" Blade		601.3003	Needle Holder 3mm
			26	412.1165	6 x Needle Sets 2mm (Flat Tip)
				413.2128	6 x Needle Sets 3mm (Chisel Tip)
				413.1128	6 x Needle Sets 3mm (Flat Tip)
				413.3128	6 x Needle Sets 3mm (Pointed Tip)
				403.1328	1 x Needle Set 3mm (Beryllium Copper - Flat Tip)
	Extras		27	712.3001	Spring - Compression
	719.1000	3/8" Bore Hose 10 Metre	28	416.3132	Intermediate Tube (Includes item 30)
	719.3000	3/8" Bore Hose 30 Metre	29	417.3032	Straight Front Tube (Includes item 30)
	805.0601	6mm Allen Key for Caphead Screws		418.3032	Round Front Tube (Includes item 30)
	819.2375	Adapter 1/4" BSP to 3/8" Hose Stem	30	806.0830	Cap Head Screw
			31	419.3341	Chisel Holder 1/2" Square
				419.3541	Chisel Holder 5/8" Hexagon
				446.1035	Service Kit (Inc. 9,17,24,25,27 & 1 Set Needles)